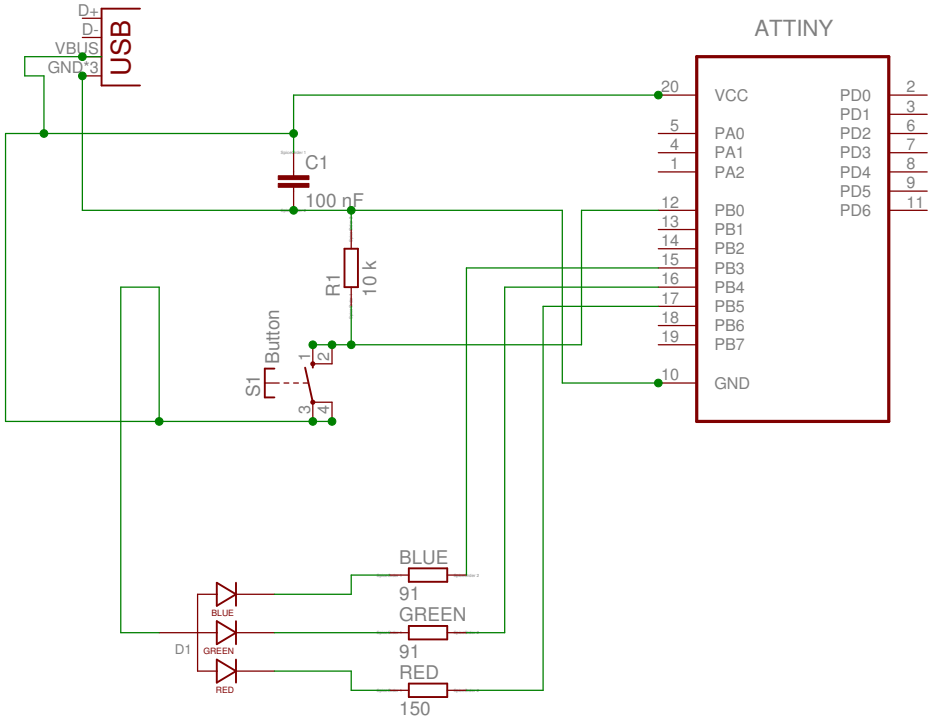
USB
D+
D-
VBUS
GND
3
ATTINY
20
VCC
5
PA0
4
PA1
1
PA2
12
PB0
13
PB1
14
PB2
15
PB3
16
PB4
17
PB5
18
PB6
19
PB7
10
GND
PD0
PD1
PD2
PD3
PD4
PD5
PD6
2
3
6
7
8
9
11
C1
100 nF
R1
10 k
S1
Button
1
2
3
4
BLUE
91
GREEN
91
RED
150
D1
BLUE
GREEN
RED